Cassette & Side channel

Installation Guide

Getting started

Being careful not to damage the blind or chain when removing the packaging, unpack the blind and check all parts are included:

- 1 x roller blind (pre-assembled)
- 1 x cassette holder
- 2 x brackets
- 2 x side channels (pre-assembled and pre-drilled)
- 3 x felt strips
- 4 x screws
- 1 x chain diverter
- 1 x fabric funnel
- 1 x chain cutout cover

Tools required:

- Pencil
- Tape measure
- Electric drill
- Rubber mallet (optional)
- Spirit level (optional)

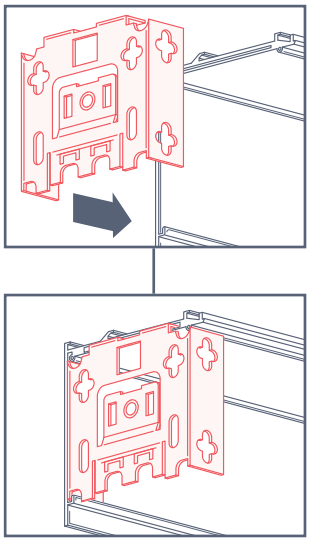

Step 1

Slide the square fascia brackets into each side of the rear-section of the cassette and screw on the end-covers using two screws on each side.

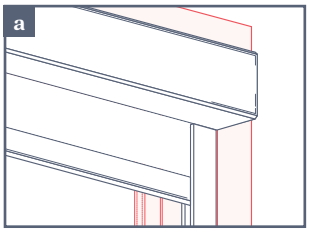

Side channels sit flush with window frame / cassette sits forward.

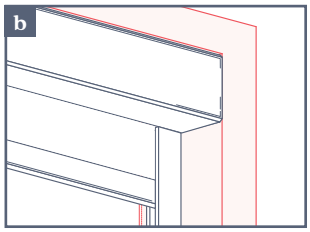

Cassette sits flush with window frame / side channels sit back.

Step 2

Decide how deep within the window frame to position the cassette and side channels, keeping in mind the backs must line up flush.

You can position the system in two ways:

Option A:
Side channels flush with the front of the window frame. *(Rear set back 23 mm).*

Set the rear of the cassette 23 mm back from the front edge of the reveal.

Option B:
Cassette flush with the front of the window frame. *(Rear set back 84 mm).*

Set the rear of the cassette 84 mm back from the front edge of the reveal.

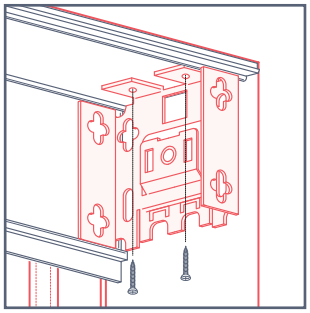

Step 3

Position the cassette inside the window frame and use the bracket holes to mark the fixing points. After pre-drilling the holes, refit the cassette and secure it by screwing through the brackets into the frame.

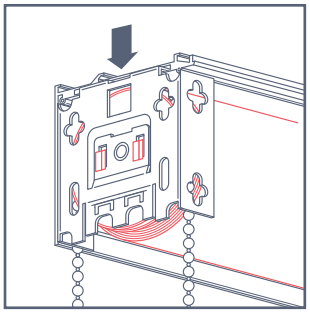

Step 4

Install the blind into the cassette. Applying pressure toward the pin end (to depress the pin), move the chain end of the blind into the bracket.

Pull down gently until the hooks set into the bracket.

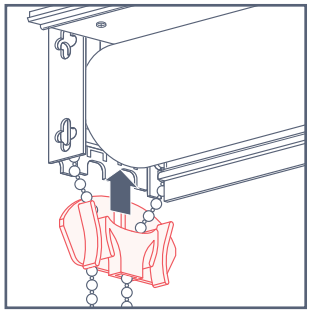

Step 5

Fit the chain diverter onto the bracket at the clutch end of the blind, then thread the rear run of the chain through the centre of the diverter and the front run through the front channel. Once fitted, operate the blind to check the fabric tracking and make any adjustments needed.

Cassette & Side channel

Installation Guide

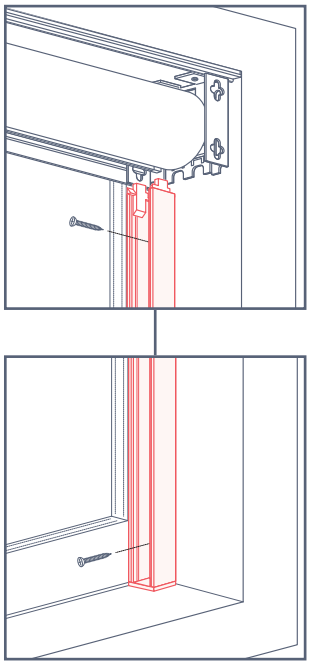

Step 6

Place the end cap on the bottom of each side-channel and the fabric funnel at the top, then hold the channel flush against the back of the cassette. Using the pre-drilled holes, fix the side-channel to the window frame, repeating the process on both sides.

Tip: Ensure the side-channel is perfectly flush with the back of the cassette before screwing into place.

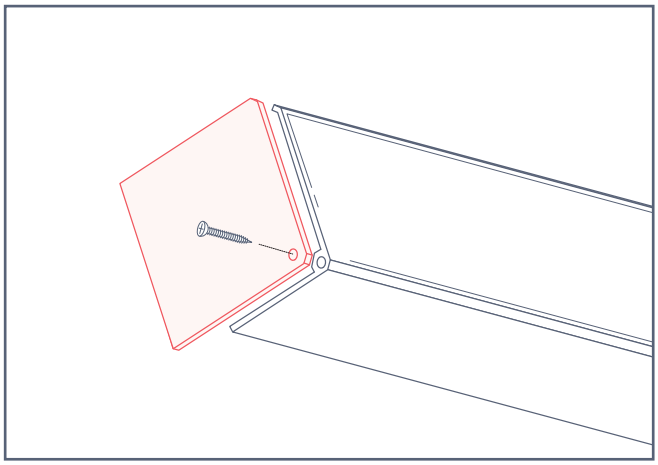

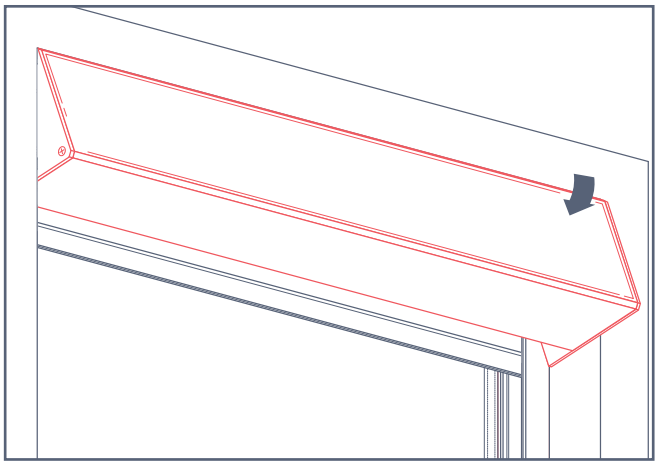

Step 7

Hook the front section of the cassette onto the rear section and swing closed, clicking into place. Screw in the final screw to each side of the cassette to hold the end covers in place.

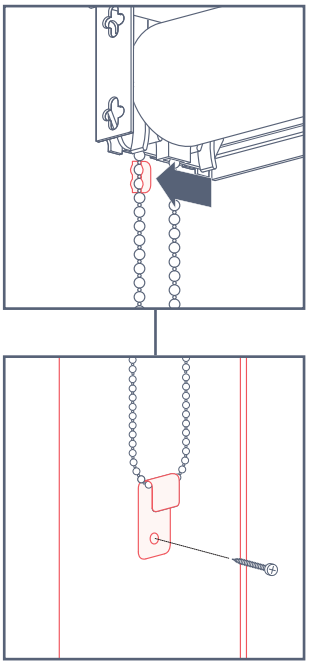

Step 8

Fix stop-balls and chain tensioner as needed.